Three-Body Systems

Instructions: Draw a separate, labelled free-body diagram for each mass. Show your force equations and calculations. Include the magnitude, direction, and units of each answer. Assume **light, inextensible ropes and frictionless pulleys**.

MILD

1. Three masses are connected by **two separate ropes** passing over frictionless pulleys. A $\mathbf{2.0\ kg}$ mass hangs on the left, an $\mathbf{8.0\ kg}$ block rests on a **frictionless horizontal table**, and a $\mathbf{5.0\ kg}$ mass hangs on the right. The tensions are labelled in the diagram.
   a. Determine the magnitude and direction of the acceleration.
   b. Determine the tension T_1 in the right rope.
   c. Determine the tension T_2 in the left rope.

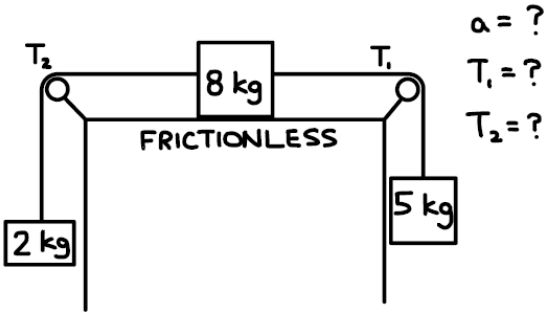

MEDIUM

2. A $\mathbf{5.0\ kg}$ block rests on a **frictionless horizontal table**. Separate ropes connect it over pulleys to a $\mathbf{15\ kg}$ hanging mass on the left and a $\mathbf{10\ kg}$ hanging mass on the right.
   a. Determine the magnitude and direction of the acceleration.
   b. Determine the tension in the left rope.
   c. Determine the tension in the right rope.

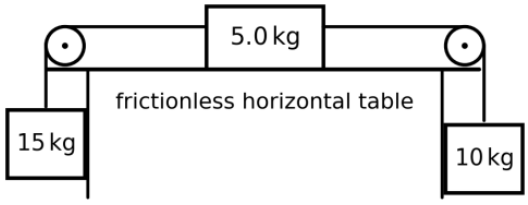

3. An $\mathbf{8.0\ kg}$ block is **already sliding right** on a rough horizontal table with $\mu_k = \mathbf{0.20}$. Separate ropes connect it over pulleys to a $\mathbf{16\ kg}$ hanging mass on the left and a $\mathbf{24\ kg}$ hanging mass on the right.
   a. Determine the magnitude and direction of the acceleration.
   b. Determine the tension in the left rope.
   c. Determine the tension in the right rope.

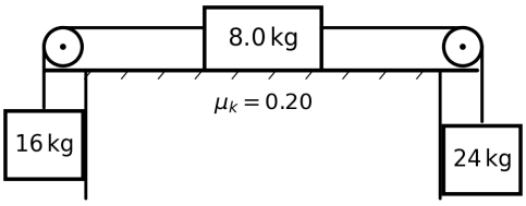

SPICY

4. An **8.0 kg** block is **initially at rest** on a rough horizontal table. Separate ropes connect it over pulleys to a **5.0 kg** hanging mass on the left and a **7.0 kg** hanging mass on the right. The coefficients of friction are μ_s = **0.23** and μ_k = **0.20**. Assume there is enough clearance for the system to move **0.50 m**.

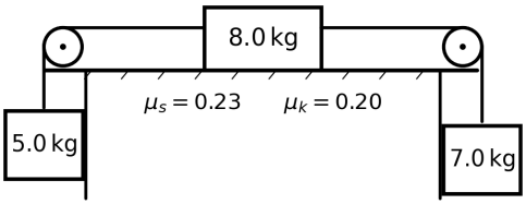

   a. Determine **whether motion begins**, and in which direction. Justify quantitatively.
   b. If the system moves, determine the **acceleration**.
   c. Determine the tension in the **left rope**.
   d. Determine the tension in the **right rope**.
   e. Determine the **speed of the 7.0 kg mass** after the centre block has moved 0.50 m from rest.

EXTRA-SPICY

5. An **8.0 kg** block is **already sliding right** on a horizontal table with μ_k = **0.60**. It is connected by **two separate ropes** over frictionless pulleys to a **10.0 kg** mass on the right and an **unknown hanging mass** m_3 on the left. The tension in the **right rope** is known: T_1 = **92 N**.

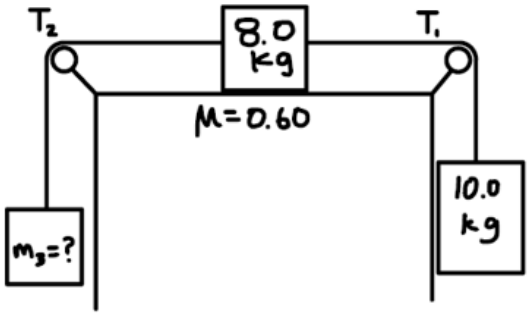

   a. Determine the acceleration of the system.
   b. Determine the unknown hanging mass m_3.
   c. Determine the tension T_2 in the left rope.