Free-Body Diagrams

Draw a free-body diagram for each object at the instant described. Label every external force and use arrow lengths to compare force magnitudes. Do not include velocity or acceleration arrows. Neglect air resistance unless it is explicitly mentioned.

Force labels:

Applied Force ($\mathbf{F_A}$),	Normal Force (F_N),	Gravitational Force (F_g),
Frictional Force ($\mathbf{F_F}$),	Tension Force (F_T),	Air Resistance Force (F_{air}).

Mild

1) A book rests on a horizontal table.

2) A ball has been released and is falling toward the ground. Neglect air resistance.

3) A lamp hangs motionless from a single vertical cord.

4) A hockey puck glides to the right at constant velocity across perfectly frictionless, level ice.

Medium

5) A student pushes a box horizontally to the right, but the box remains stationary on the floor.

6) A student pushes a book to the right across a rough horizontal table at constant velocity.
The same book is pushed to the right and speeds up. Draw a second diagram and compare.

7) A box is sliding to the right across a rough, level floor after the person pushing it lets go. The box is slowing down.

Spicy

8) A football is moving upward and to the right after leaving the thrower's hand. Neglect air resistance.
The same football reaches the highest point of its trajectory. Draw a second diagram and compare.

9) A gym bag hangs motionless from two identical vertical straps that share its weight equally.

10) A skydiver falls downward and speeds up before opening a parachute. Include air resistance.
The same skydiver is falling downward at terminal velocity. Draw a second diagram.
The skydiver's parachute is fully open. The skydiver is still falling downward but is slowing down. Draw a third diagram.

Extra-Spicy

11) A car travels to the right at constant velocity on a level road. The road provides a forward driving force, while air resistance and rolling resistance act backward. Combine the backward resistive forces into one arrow.

Net Force

For each force diagram, determine the magnitude and direction of the net force. Show the horizontal and vertical force totals separately when both are present.

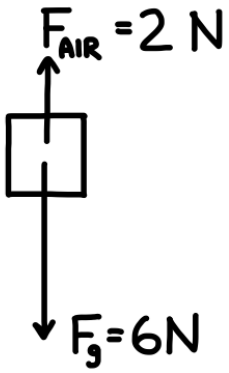

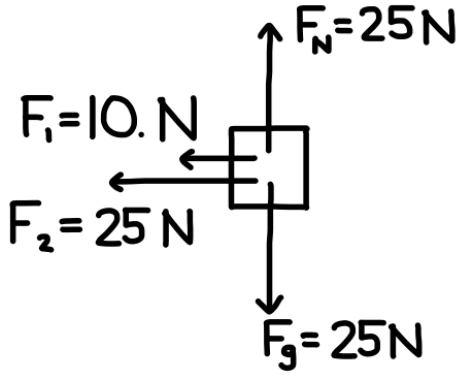

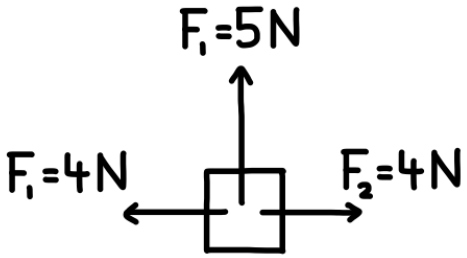

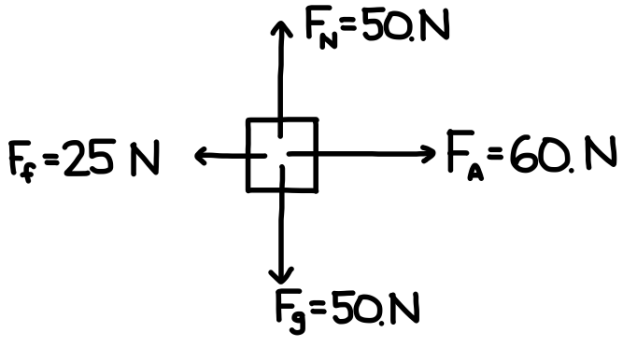

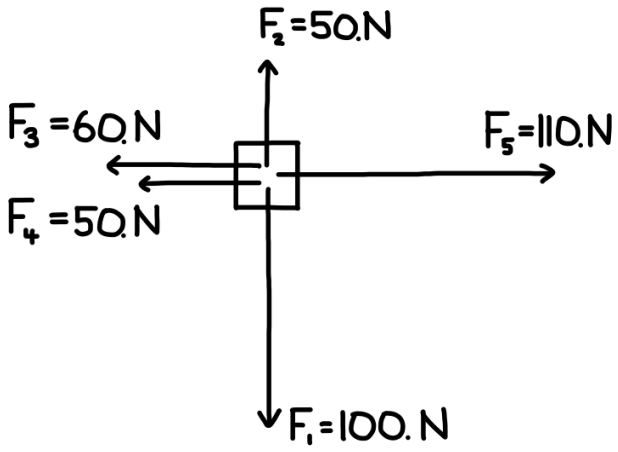

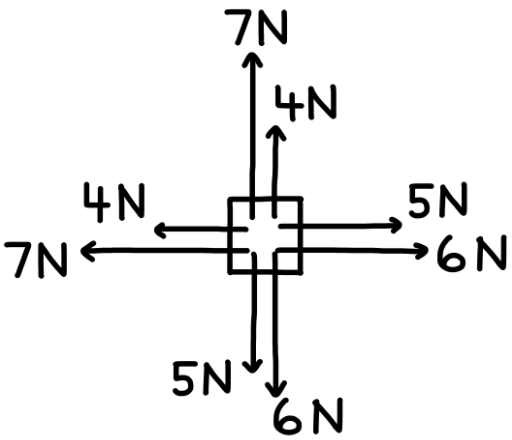

Determine the unknown force.

Use the stated net force to calculate every unknown force. Show your calculation and give the magnitude and direction.

F_{net} = 3 N Right

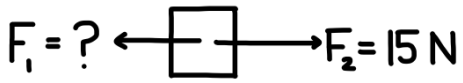

F_{net} = 10. N Down

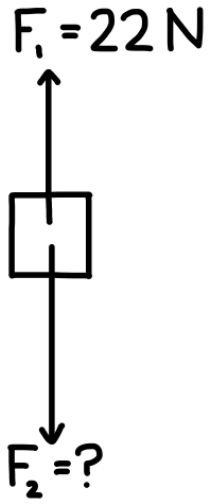

F_{net} = 12 N Up

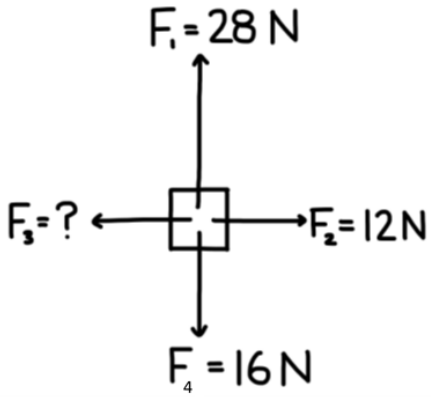

F_{net} = 10. N Right

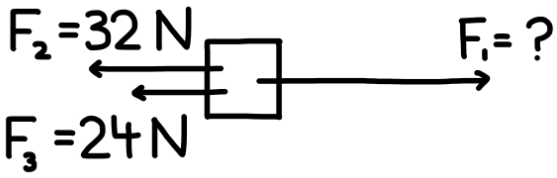

F_{net} = 0

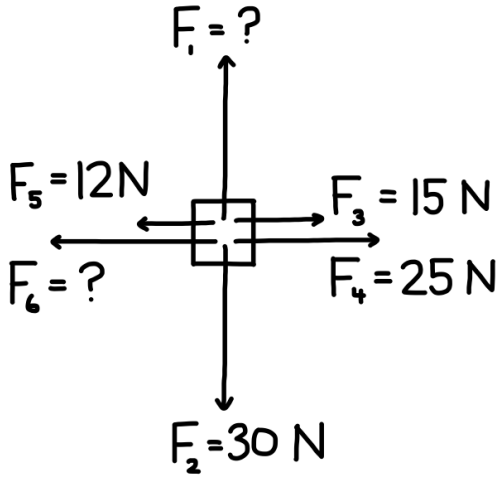

Draw additional forces that produces a net force of 2 N to the right.

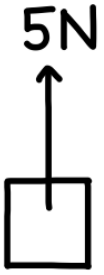

Determine the unknown force.

1. Draw a clear **free-body diagram** showing all forces.
2. Identify the **vertical and horizontal** forces.
3. Determine the requested force or forces, showing calculations and directions.

Mild

1) A book rests on a horizontal table. Gravity pulls downward on the book with 15 N. Determine the normal force exerted by the table on the book.
2) A lamp hangs motionless from a single vertical cord. Its weight is 48 N downward. Determine the tension in the cord.
3) A student pushes a box horizontally to the right with 25 N, but the box does not move. Determine the static frictional force acting on the box.

Medium

4) A textbook is pushed horizontally to the right across a rough table with 3.0 N. It moves at constant velocity. Determine the kinetic frictional force acting on the textbook.
5) A gym bag hangs motionless from two identical vertical straps that share its weight equally. The bag weighs 90 N. Determine the tension in each strap.
6) A crate weighing 120 N is pushed horizontally to the right across a level floor with 35 N. Friction acts to the left with 12 N. Determine the net force acting on the crate.

Spicy

7) A crate slides to the right but is slowing down. A student continues pushing it with 42 N to the right. The net force is 14 N to the left. Determine the magnitude and direction of the frictional force.
8) A box moves to the right at constant velocity across a rough level floor. One student pushes it with 60 N to the right, while a second student pulls it with 15 N to the left. Determine the kinetic frictional force on the box.
9) A crate weighing 120 N remains stationary on a level floor. One student pushes straight downward on it with 30 N, while another pushes it horizontally to the right with 40 N. Determine the normal force and the static frictional force exerted by the floor.

Extra-Spicy

10) A student pushes a 75 N box horizontally to the right against a vertical wall with 140 N. The box remains motionless. Determine the normal force and the static frictional force exerted by the wall on the box.
11) A 35 N box rests on top of a 55 N box, which rests on a level floor. Both boxes remain stationary. Draw separate free-body diagrams for the upper and lower boxes. Determine (a) the normal force exerted by the lower box on the upper box and (b) the normal force exerted by the floor on the lower box.
12) A sandbag rests on the floor of a stationary lift. The lift cable pulls upward with 3000 N, and the lift itself weighs 2800 N.
    a) Draw separate free-body diagrams for the lift and the sandbag.
    b) Determine the downward force exerted by the sandbag on the lift floor.
    c) Determine the upward force exerted by the lift floor on the sandbag.